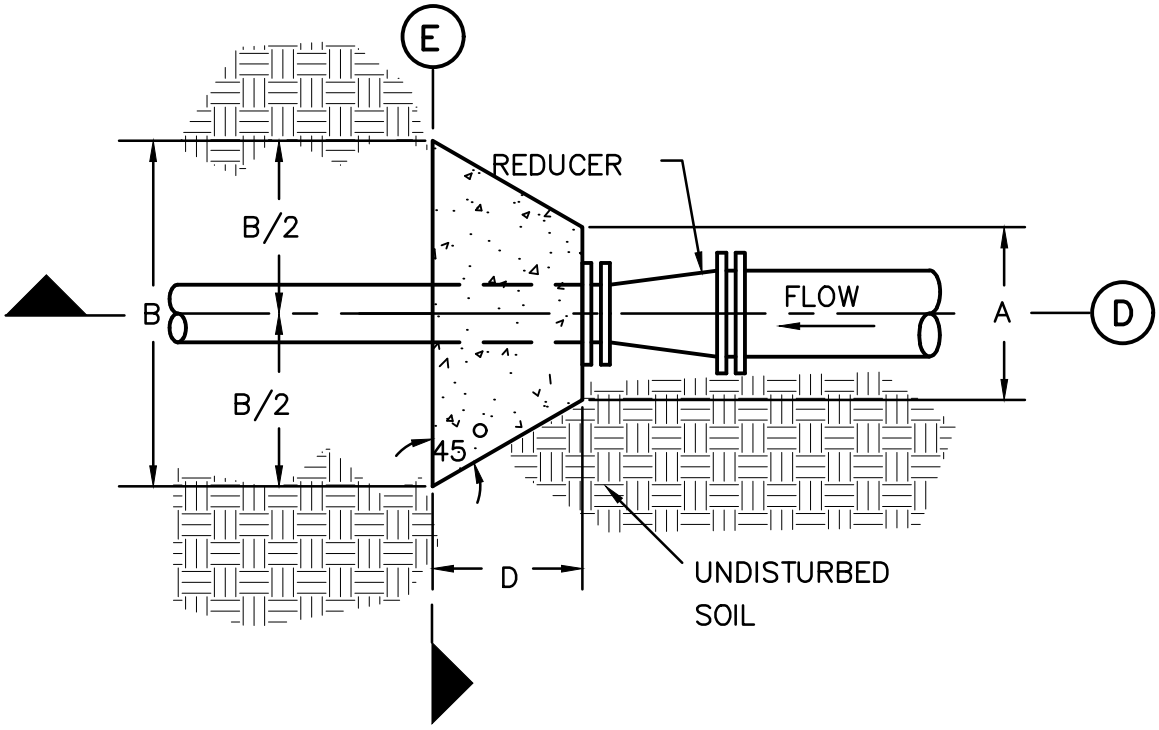

REDUCER - PLAN

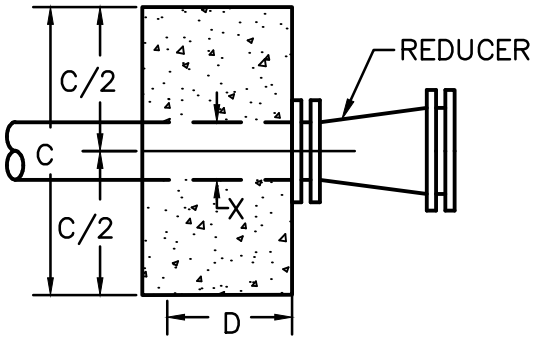

SECTION D

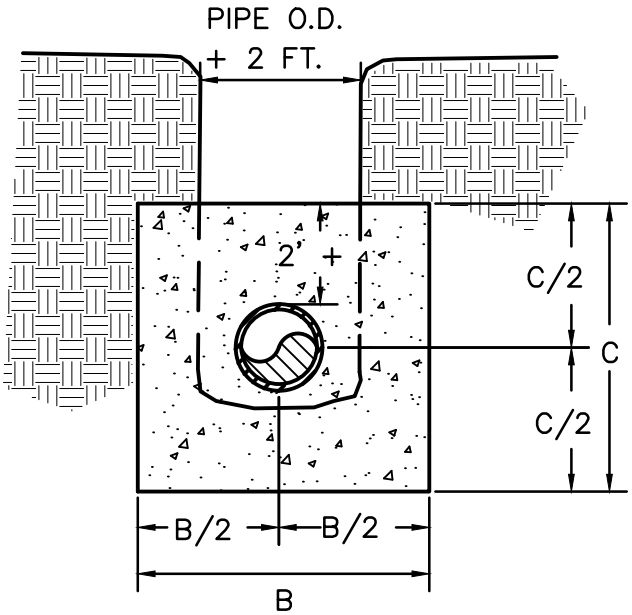

SECTION E

NOTE:
MEGALUGS OR MJ–FIELD LOK WITH BLOCKING REQUIRED ON ALL FITTINGS.

SHEET 3 of 5

NOTE:
DEVELOPER/CONTRACTOR IS REQUIRED TO PERFORM HYDROSTATIC PRESSURE TESTS IN ACCORDANCE WITH SECTION 02660–"WATER DISTRIBUTION SYSTEMS", OF THE TOWN OF BRASELTON STANDARD SPECIFICATIONS (LATEST EDITION).

TOWN OF BRASELTON WATER & SEWER DEPARTMENTS

JOB TITLE	SHEET TITLE	DRN. BY: EMI	REV. NO.	BY	DATE
STANDARD DETAIL	**THRUST BLOCKING DIMENSIONS (200 psi LINE PRESSURE)**	CKD BY:			
		APPD. BY:			
		DATE: MARCH 2004			
	DETAIL No. W-3	FILE No. 03033 W-4.dwg	SCALE: N.T.S.		